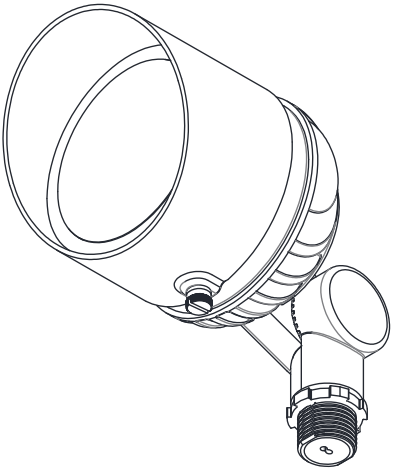

INSTALLATION INSTRUCTIONS

AMP® LOW VOLTAGE LANDSCAPE LIGHTING

AMP® iQ Smart Spotlight

ITEM: SM-AAL-1058

1-813-978-3900 • Mon-Fri 9am-6pm (ET)

IMPORTANT: PLEASE READ BEFORE INSTALLATION

This fixture is intended for installation in accordance with local codes and the National Electric Code (NEC). Failure to adhere to these codes and instructions may result in serious injury, property damage and void the warranty.

These instructions do not intend to cover all variations in installation, operation maintenance or mounting situations.

1. Make sure that the power is turned OFF before installing or servicing this fixture.
2. Warning: this fixture is not intended to be installed within 10 feet [3 meters] of a pool, spa or fountain.
3. This fixture is intended to be used only with a power supply (transformer) rated maximum of 300 watts (25 AMPS) at 15 Volts.
4. Underground Low Voltage Cable must not be buried over 6" (15.2 cm) in order to connect to the main low voltage cable.
5. Fixture wires must be connected to transformer correctly.
6. Position the wire connector so that it is located within 6 inches (15.2 cm) from a building structure, a luminaire, or fitting.
7. The low voltage cable should be protected by routing in close proximity to the luminaire or fitting, or next to a building structure such as a house or deck.
8. Contact only switch/plug when turning on.
9. When ordering additional wire or cable, please contact the manufacturer customer service or contact a qualified electrician.

IMPORTANT SAFETY INSTRUCTIONS

LIGHTED LAMP IS HOT!

WARNING – TO REDUCE THE RISK OF FIRE OR INJURY TO PERSONS.

1. Turn off/unplug and allow to cool before reducing lamp.
2. Fixture gets HOT quickly!
3. Do not touch the hot lens, guard or cowl.
4. Keep lamp away from materials that may burn.
5. Do not operate the fixture with a damaged or missing lens or shield.

SAVE THESE INSTRUCTIONS

IMPORTANT FCC INSTRUCTIONS AND WARNINGS

NOTE: This equipment has been tested and found to comply with the limits for a Class B digital device, pursuant to part 15 of the FCC Rules. These limits are designed to provide reasonable protection against harmful interference in a residential installation. This equipment generates, uses and can radiate radio frequency energy and, if not installed and used in accordance with the instructions, may cause harmful interference to radio communications.
However, there is no guarantee that interference will not occur in a particular installation. If this equipment does cause harmful interference to radio or television reception, which can be determined by turning the equipment off and on, the user is encouraged to try to correct the interference by one or more of the following measures:
—Reorient or relocate the receiving antenna.
—Increase the separation between the equipment and receiver.
—Connect the equipment into an outlet on a circuit different from that to which the receiver is connected.
—Consult the dealer or an experienced radio/TV technician for help.

Warning responsible for compliance could void the user's authority to operate the equipment.

This device complies with part 15 of the FCC Rules. Operation is subject to the following two conditions:
(1) This device may not cause harmful interference, and (2) this device must accept any interference received, including interference that may cause undesired operation

RF Exposure Statement:
This equipment complies with FCC/ISED RF radiation exposure limits set forth for an uncontrolled environment. This equipment should be installed and operated with a minimum distance of 20 centimeters between the radiator and your body.

PACKAGE CONTENTS

A. (1) Smart Spotlight with 60° lens
B. (1) 38° Optic
C. (1) Allen Wrench

PARTS REQUIRED (SOLD SEPARATELY)

A. (1) Mounting Accessories
B. AMP iQ Smart Transformer

*** Visit our website www.amplighting.com to purchase. ***

PRODUCT DIMENSIONS

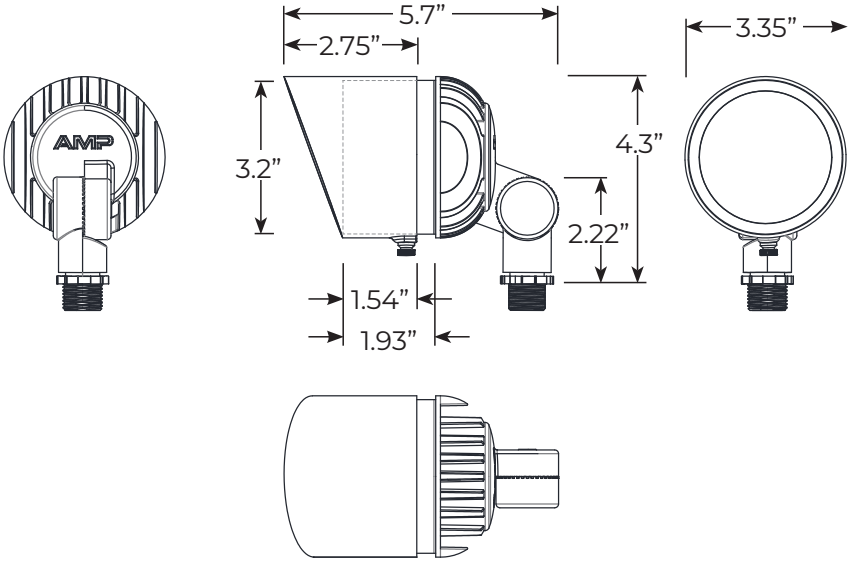

1 INSTALL STAKE

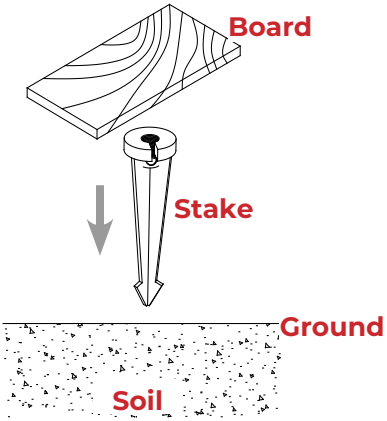

Determine the desired location for mounting the stake. Hammer the stake into the ground until flange of stake is flush to grade. To avoid damage to the stake, place a board on top of the stake while hammering.

Note: If the ground is hard and the stake is difficult to install, make a crosscut in the ground using a flat shovel.

2 INSTALL SMART SPOTLIGHT

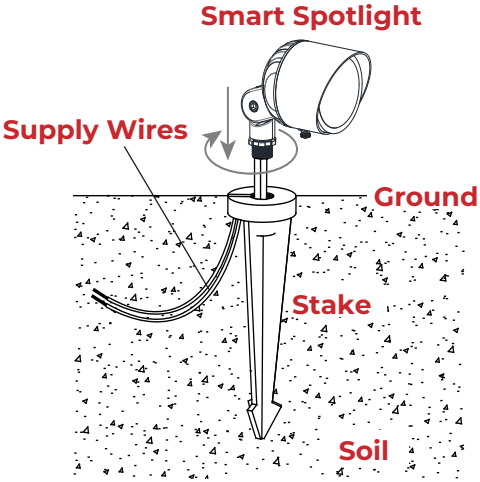

Pass supply wires through the center hole of the stake and thread the smart spotlight onto the stake. Hand tighten until snug. Clear away area in ground and lay supply wires into wireway slots.

NOTE

For best smart lighting experience, leave all smart devices with the power always on.

3 CONNECT SMART SPOTLIGHT TO SMART TRANSFORMER

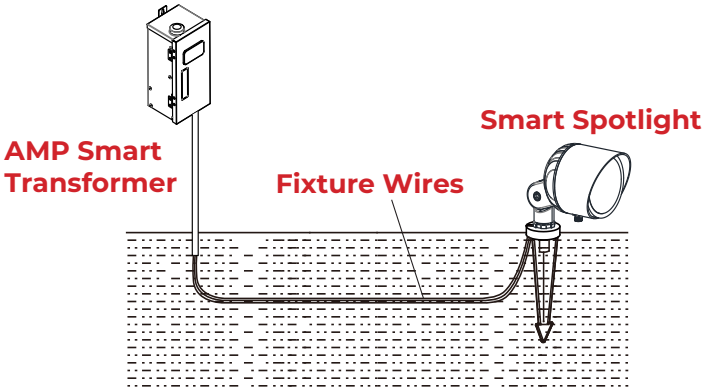

For one smart spotlight, connect the fixture wires from the smart spotlight to the smart transformer directly.

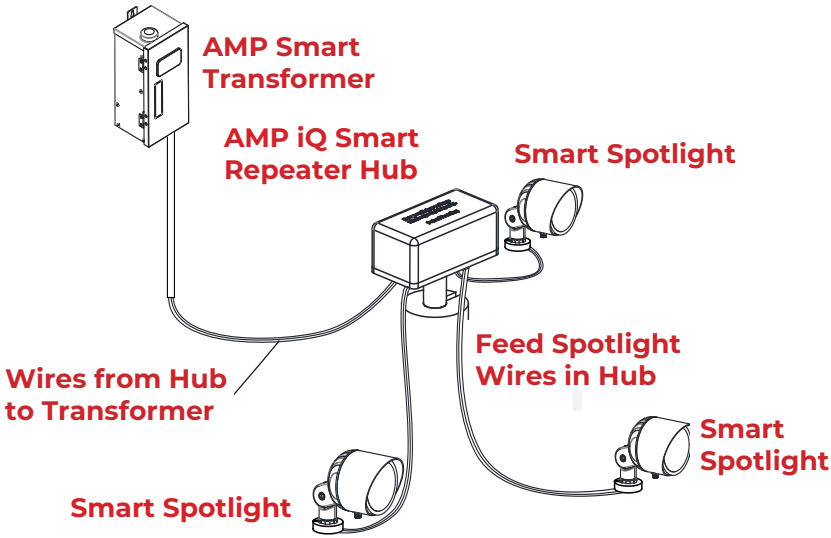

For multiple smart spotlights, we suggest using the smart repeater hub to connect all lights to the smart transformer.

1. Place the smart repeater hub that is used to connect multiple smart spotlights near the transformer. Use the proper length wires to connect the smart repeater hub and the smart transformer.
2. Feed all supply wires from the smart spotlights in the smart hub.

4 ADJUST LUMINAIRE DIRECTION

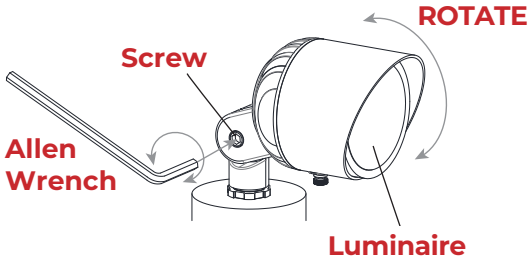

By using the Allen wrench, unlock the screw at the joint to adjust the luminaire to your desired direction. Always re-tighten the screw after adjustment.

HOW TO REPLACE OPTIC

1 REMOVE GLARE GUARD

Remove the glare guard from the luminaire by unlocking the screw.

2 REMOVE LENS

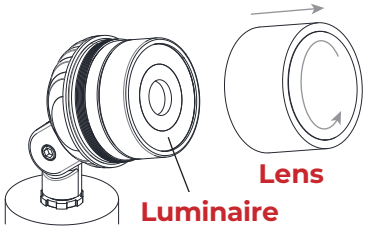

Unscrew the lens and remove it from the luminaire.

3 REMOVE EXISTING OPTIC

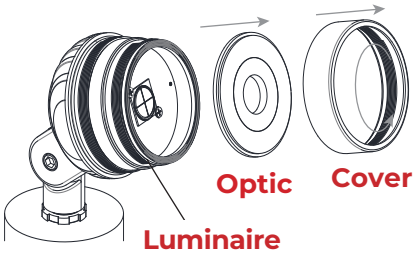

Unscrew the cover and remove it from the luminaire. Remove the existing optic.

4 INSTALL 38° OPTIC

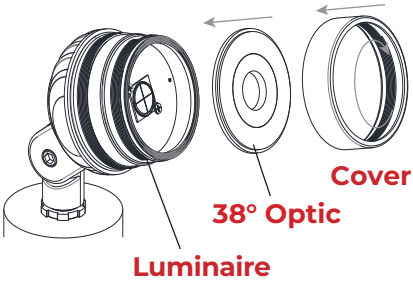

Place the 38° Optic inside of the luminaire. Thread the removed cover back on. Hand tighten until snug.

5 INSTALL LENS

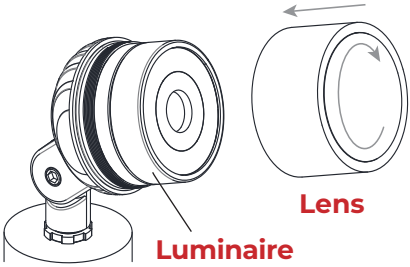

Thread the previously removed lens back onto the luminaire and hand tighten until snug.

6 INSTALL GLARE GUARD

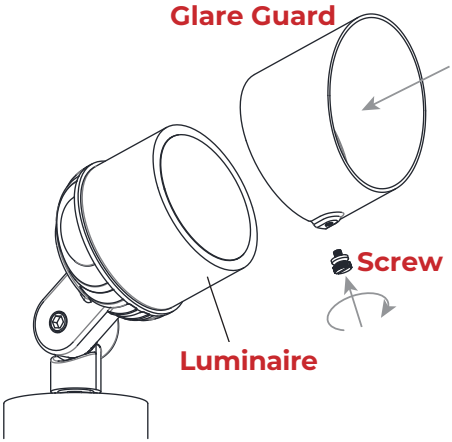

Place the glare guard back onto the luminaire and thread the screw back. Hand tighten until snug.

TO COMPLETE SETUP

SCAN THE QR CODE

Product Guide

1-813-978-3700 · Mon-Fri 9am-6pm (ET)

Specifications and product details subject to change without notice.
© Copyright 2024, AMP® Lighting, Lutz FL USA 33549 · All rights reserved.
customersupport@amplighting.com · amplighting.com