Project Name _____ Date _____

Type or Model _____ Qty _____

AMP iQ™ Smart RGBCW LED MagnumPro Path & Area Light

SM-AAR-3516-B-BZ (Bronze)
SM-AAR-3516-B-BK (Bronze)

PRODUCT DESCRIPTION

Built for professional-grade performance, the AMP® iQ™ Smart Path Light combines durable construction, flexible optical performance, and advanced smart lighting control in a single, fully integrated fixture. Constructed from cast brass materials with AMP Lighting quality.

Integrated into the AMP iQ smart lighting platform, this fixture connects through a Bluetooth® mesh network and is controlled with the easy-to-use, intuitive AMP iQ mobile app, enabling system-wide organization and control through zones, groups, scenes, and automations. Allowing precise control of brightness, colors and tunable white temperatures. AMP iQ™ is the only Lifetime Warranty Smart Platform in the landscape industry.

KEY BENEFITS

- AMP iQ Smart system device.
- Control with the AMP iQ™ Smart Landscape Lighting app
- Extended CCT options inlcuding 2200K, 2500K, 2700K, 3000K, 3500K and 4000K. Full spectrum RGBCW capabilities.
- Interchangeable Smart LED module allows for easy serviceability
- Dimming from 0% to 100% via the AMP iQ app.
- Customize colors, color temperature, dimming, and scheduling with the AMP iQ app.
- Solid cast brass construction.
- Silicone plug at lead wire exit prevents ground moisture.
- Water tight Silicone O-Ring - keeps water from entering luminaire.
- 10” Hammer™ Stake included. Additional stakes available on amplighting.com.
- Extra-long (1-inch) strip resistant threading and solid brass locknut provide superior mounting stability.
- 12’ approximate beam spread.

SPECIFICATIONS

- **Construction:** Cast Brass
- **Finish:** Bronze or Black
  * Bronze finish will patina naturally over time.
  * Black finish is a marine grade polyester powdercoat paint.
  * Finish is rated per ASTM B117 for a minimum.
  * 1000-hour salt spray test.
- **Lead Wire:** 25’ 14AWG
- **Lens:** Clear (be more descriptive)
- **Light Source:** Integrated LED (RGBCW)
- **Operating Voltage:** 11-16VAC
- **Powered by:** AMP iQ™ Smart LED Transformer
- **Power Consumption:** 6W
- **Volt Amps:** 8.4VA
- **IP Rating:** IP67
- **Lumens:** 171 to 217 lumens based on CCT(see chart)
- Up to 95 CRI (see chart)
- Maximum distance between pathlights for robust connectivity is ≤ 100ft.

CERTIFICATIONS

FCC Bluetooth® UL CERTIFIED SAFETY US·CA E466348

WARRANTY

Lifetime Warranty

© Copyright 2025, AMP® Lighting, Lutz, FL USA 33549 · All rights reserved · 813.978.3900 · www.amplighting.com

AMP iQ™ Smart RGBCW LED MagnumPro Path & Area Light

SM-AAR-3516-B-BZ (Bronze)
SM-AAR-3516-B-BK (Black)

PHOTOMETRICS & ELECTRICAL

Fixture	CCT/RGB	Lumens	CRI	Wattage	PF	VA
SM-AAR-3516 AMP iQ™ Path Light	2200K	171	87	5.6	0.67	8.4
	2500K	178	88			
	2700K	184	92			
	3000K	194	94			
	3500K	204	94			
	4000K	217	95			
	Red	76	NA			
	Green	146	NA			
	Blue	36	NA			

PRODUCT DIMENSIONS

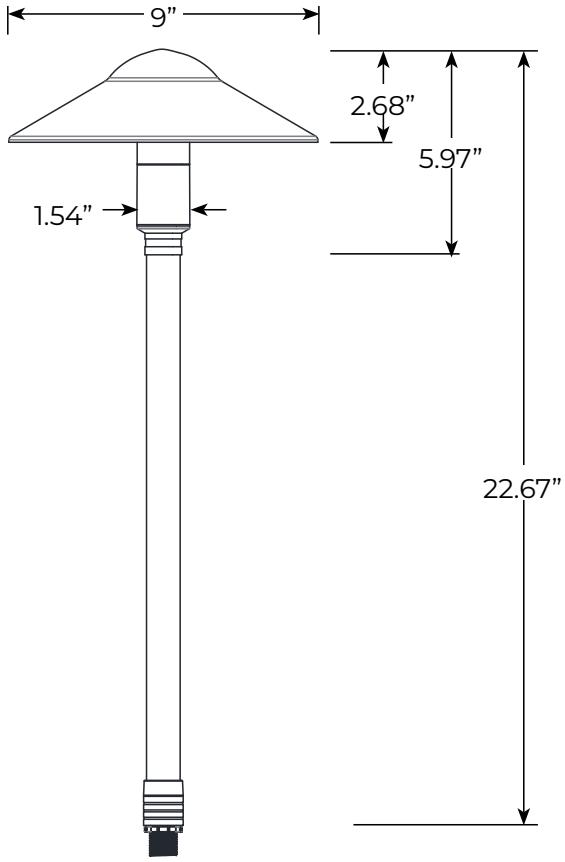

© Copyright 2025, AMP® Lighting, Lutz, FL USA 33549 • All rights reserved • 813.978.3900 • www.amplighting.com

AMP iQ™ Smart RGBCW LED MagnumPro Path & Area Light

SM-AAR-3516-B-BZ (Bronze)
SM-AAR-3516-B-BK (Bronze)

TECHNICAL SPECIFICATIONS

The AMP iQ Lighting System is a complete, ecosystem-based solution where every component works together within a secure Bluetooth® mesh network. AMP iQ lighting fixtures, gateways, and transformers are engineered to communicate seamlessly, enabling advanced control, effects, and automation across an entire property. To ensure optimal performance and reliability, all system installations must use AMP iQ approved devices and the AMP iQ app.

Download on the App Store

GET IT ON Google Play

- **Connectivity:** Bluetooth® 5.0 mesh network
- **Wireless Range:** Up to 100 ft fixture-to-fixture (line of sight), depending on fixture type
- **Network Type:** Self-healing mesh for reliable system communication
- **Wi-Fi Requirement:** 2.4 or 5.0 GHz Wi-Fi required for gateway connectivity
- **Control:** AMP iQ™ App (iOS® & Android®)
- **Cloud Access:** Secure, U.S.-based cloud infrastructure for remote control & automations
- Requires an AMP iQ Gateway attached to a Wi-Fi network for remote access and scheduling
- **System Compatibility:** Requires AMP iQ-compatible fixtures, devices and the AMP iQ app.
- Proper voltage levels at 11V to 16V for each device is required to maintain a robust system and reliable operation.

© Copyright 2025, AMP® Lighting, Lutz, FL USA 33549 • All rights reserved • 813.978.3900 • www.amplighting.com